PUBLISHED: 12-JUL-2017
2017.0 DISCOVERY (LR), 308-07

TRANSFER CASE - [+] TWIN SPEED TRANSFER CASE

DIAGNOSIS AND TESTING

PRINCIPLES OF OPERATION

For a detailed description of the Transfer Case, refer to the relevant Description and Operation section in the workshop manual. REFER to: Transfer Case (308-07 Transfer Case - [+] Twin Speed Transfer Case, Description and Operation).

INSPECTION AND VERIFICATION

CAUTION:

Diagnosis by substitution from a donor vehicle is **NOT** acceptable. Substitution of control modules does not guarantee confirmation of a fault, and may also cause additional faults in the vehicle being tested and/or the donor vehicle.

NOTE:

If a control module or a component is suspect and the vehicle remains under manufacturer warranty, refer to the Warranty Policy and Procedures manual, or determine if any prior approval programme is in operation, prior to the installation of a new module/component.

1. Verify the customer concern

1. Visually inspect for obvious signs of damage and system integrity

Visual Inspection

transmissionmanuals.com

MECHANICAL	ELECTRICAL
▪ Transfer case ▪ Driveshafts ▪ Differentials ▪ Halfshafts ▪ Fluid leaks	▪ Fuses ▪ Wiring harnesses and connectors ▪ Transfer case control module ▪ Instrument cluster ▪ High/low range switch

1. If an obvious cause for an observed or reported concern is found, correct the cause (if possible) before proceeding to the next step

1. If the cause is not visually evident, verify the symptom and refer to the Symptom Chart, alternatively check for Diagnostic Trouble Codes (DTCs) and refer to the DTC Index

1. Check DDW for open campaigns. Refer to the corresponding bulletins and SSMs which may be valid for the specific customer complaint and carry out the recommendations as required

SYMPTOM CHART

SYMPTOM	MESSAGE	POSSIBLE CAUSES	ACTION
Traction Reduced message displayed via the instrument cluster	Traction Reduced	▪ TCCM integrated actuator internal /mechanical failure /overtemperature ▪ Rear Differential Control Module (RDCM) fault ▪ ABS fault ▪ CAN fault ▪ Harness or power supply fault	▪ Using Jaguar Land Rover approved diagnostic equipment, read the DTCs and refer to the relevant DTC index. Complete the appropriate Guided Flow as specified via the Pathfinder tool ▪ Using Jaguar Land Rover approved diagnostic equipment, check the snapshot data to determine the missing message source control module on the FlexRay network. Check the relevant control module for related DTCs and refer to the relevant DTC index
Loss Of Drive message displayed via the instrument cluster	Loss Of Drive	▪ TCCM integrated actuator internal /mechanical failure /overtemperature ▪ Harness or power supply fault	▪ Using Jaguar Land Rover approved diagnostic equipment, read the DTCs and refer to the relevant DTC index. Complete the appropriate Guided Flow as specified via the Pathfinder tool
A range change is not initiated when	Range Change Not Available	▪ TCCM internal /mechanical failure /overtemperature	▪ Using Jaguar Land Rover approved diagnostic equipment, read the DTCs and refer to the relevant DTC index. Complete the appropriate Guided Flow as specified via the Pathfinder tool

transmissionmanuals.com

the high/low range switch is pressed		▪ Rear Differential Control Module (RDCM) fault ▪ Transmission Control Module (TCM) fault ▪ Harness or power supply fault	
		▪ Power supply voltage to TCM is less than 11v	▪ Using Jaguar Land Rover approved diagnostic equipment, check datalogger signals - Main ECU Voltage Supply (0xDD02) and Control Module Voltage (0xF442). If the power supply to the module is below 11 v, refer to the relevant section of the workshop manual and test the battery and charging system
		▪ Range change requested while the transmission oil temperature is lower than -30°C	▪ Using Jaguar Land Rover approved diagnostic equipment, check datalogger signal - Transmission Temperature (0xFE00). Range change is available when the recorded transmission oil temperature is above -30°C (Note: only one range change request per minute is available while the transmission oil temperature is between -30°C and 0°C. These restrictions do not apply once the transmission oil temperature is above 0°C)
		▪ A second range change has been requested before the 60 second timer has expired following an initial range request made while the transmission oil temperature is between -30°C and 0°C	▪ Using Jaguar Land Rover approved diagnostic equipment, check datalogger signal - Transmission Temperature (0xFE00). Retry range change request when the recorded transmission oil temperature is above 0°C
A range change is not initiated	Low Range Requested: Available When Stationary	▪ Range change requested when conditions for change to low range are not satisfied	▪ The vehicle must be stationary for low range change to be successfully initiated
A range change is not initiated	High Range Requested: Available	▪ Range change requested when conditions for change to high range are not satisfied	▪ Vehicle speed must be lower than 37mph/60kph for high range change to be successfully initiated

transmissionmanuals.com

	Below 37mph /60kph		
A range change is not initiated	Low Range Requested: Select Neutral For Range Change	▪ Range change requested when conditions for range change are not satisfied	▪ The transmission must be in neutral for the range change to be successfully initiated
	High Range Requested: Select Neutral For Range Change		
A range change is not initiated	-	▪ Range change request signal not received by the TCCM	▪ Using Jaguar Land Rover approved diagnostic equipment, check the Terrain Response Switchpack for related DTCs and refer to the relevant DTC index
Judder (see definition below) during low speed manoeuvring with high steering inputs (front and rear driveshafts rotating at different speeds)	-	**NOTE:** At full lock, there will be some tyre scrubbing; as the temperature drops, scrubbing may be experienced as stick/slip judder. This is normal and does not require any service intervention ▪ Transfer case clutch not disengaged fully	▪ Refer to the relevant section of the workshop manual and check the transfer case fluid level/condition. Using JLR approved diagnostic equipment, perform routine - Transfer Case Oil Replacement (see details below)
Oil leaks from transfer case	-	▪ Blocked or restricted breather pipe ▪ Physical damage to shaft seal flange /slinger components	▪ Check the oil breather pipe for damage or restrictions and rectify as required ▪ Check for evidence of oil leaks from the front/rear shaft seals and replace oil seals as required

transmissionmanuals.com

DEFINITION OF JUDDER

When diagnosing faults involving vehicle judder, see guidance below for a working definition of the characteristics of the condition:

- Judder is an event which occurs while carrying out low speed tight turn manoeuvres (car park type driving) and transmits through the vehicle chassis in the frequency range of 30Hz to 50Hz
- The judder frequency is dull and audible and is possible to sense through the steering wheel
- The judder event is a continuous dull vibration / judder which will occur for a number of seconds. It is not a single occurrence
- Judder will NOT occur while driving in a straight line
- Judder is associated with low speed tight turn driving at low to medium throttle (junction pull-aways and car park manoeuvres) and may feel like there is something sticking in the system
- At full lock, some tyre scrubbing may be experienced. As the temperature drops, such scrubbing may be experienced as stick/slip judder. This is normal and does not require any service intervention

transmissionmanuals.com

TCCM DTC ERROR COUNT PINPOINT TESTS

In order to determine whether certain Transfer Case Control Module (TCCM) DTCs have been logged with sufficient frequency to require the replacement of the TCCM, follow the pinpoint test diagnostics outlined below:

PINPOINT TEST A : DTC SNAPSHOT - EXTENDED DATA CHECKS	
TEST CONDITIONS	**DETAILS/RESULTS/ACTIONS**
A1: CHECK AND RECORD DTC SNAPSHOT VALUES	
	1 Note the DTC Snapshot data value of DTC Extended Data value - Total Operation Cycles with testfailed Status
	2 Note the DTC Snapshot data value of DTC Extended Data value - Total Operation Cycles since First testfailed Status
	Are **both** these values 3 or greater? **Yes** GO to A2 . **No** The DTC should be considered as **intermittent** . Refer to the appropriate Intermittent DTC ACTION in the table below
A2: COMPARISONS OF DTC DTC SNAPSHOT VALUES WHEN BOTH VALUES ARE 3 OR GREATER	
	1 Compare the values of DTC Extended Data value - Total Operation Cycles with testfailed Status and DTC Extended Data value - Total Operation Cycles since First testfailed Status

	Are the two values either the same, or only differing within a count of one? **Yes** The DTC should be considered as **permanent** . Refer to the appropriate Permanent DTC ACTION in the table below **No** The DTC should be considered as **intermittent** . Refer to the appropriate Intermittent DTC ACTION in the table below

TRANSFER CASE CONTROL MODULE DTC ACTION TABLE

DTC	PERMANENT DTC ACTION	INTERMITTENT DTC ACTION
▪ P0605-43 ▪ P062F-43 ▪ P062F-68 ▪ P0666-11 ▪ P0666-12 ▪ P0666-29 ▪ P0666-64 ▪ P160C-45 ▪ P160C-48 ▪ P160C-94 ▪ U200C-9A	▪ Install a new transfer case control module and configure as a new module. Refer to the Transfer Case Control Module Replacement Application instructions in this section	▪ Using Jaguar Land Rover approved diagnostic equipment, perform the Transfer Case Healthcheck Application. The application will subsequently test the system and report a DTC if a fault persists ▪ If fault persists, install a new transfer case control module and configure as a new module. Refer to the Transfer Case Control Module Replacement Application instructions in this section
▪ P18A4-13 ▪ P18A4-16 ▪ P18A4-17	▪ Refer to the electrical circuit diagrams and check the hi/low range position sensor power circuit for circuit faults. Repair circuit as required, clear DTC and retest ▪ If the fault persists, install and configure a new high/low range position sensor. Refer to the High/Low Range Position Sensor Replacement Application instructions in this section ▪ Clear DTC, start the engine and retest ▪ If fault persists, install a new transfer case control module and configure as a new module. Refer to the Transfer Case Control Module Replacement Application instructions in this section	▪ Clear DTC, start the engine and retest

transmissionmanuals.com

▪ P18A5-03 ▪ P18A5-11 ▪ P18A5-12 ▪ P18A5-13 ▪ P18A5-37	▪ Refer to the electrical circuit diagrams and check the hi/low range position sensor signal circuit for circuit faults. Repair circuit as required, clear DTC and retest ▪ If the fault persists, install and configure a new high/low range position sensor. Refer to the High/Low Range Position Sensor Replacement Application instructions in this section ▪ Clear DTC, start the engine and retest ▪ If fault persists, install a new transfer case control module and configure as a new module. Refer to the Transfer Case Control Module Replacement Application instructions in this section	▪ Clear DTC, start the engine and retest
▪ U0080-88	▪ Refer to the electrical circuit diagrams and check the FlexRay bus circuit for short circuit to ground, short circuit to power, open circuit, high resistance. Repair circuit as required ▪ Clear DTC, start the engine and retest ▪ If fault persists, install a new transfer case control module and configure as a new module. Refer to the Transfer Case Control Module Replacement Application instructions in this section	▪ Using Jaguar Land Rover approved diagnostic equipment, perform the Transfer Case Healthcheck Application. The application will subsequently test the system and report a DTC if a fault persists ▪ If fault persists, install a new transfer case control module and configure as a new module. Refer to the Transfer Case Control Module Replacement Application instructions in this section
▪ U1000-02 ▪ U1000-11 ▪ U1000-12 ▪ U1000-16 ▪ U1000-17 ▪ U1000-1C ▪ U1000-49 ▪ U1000-56 ▪ U1000-62 ▪ U1A4B-16 ▪ U1A4B-17 ▪ U1A4B-1C	▪ Install a new transfer case control module and configure as a new module. Refer to the Transfer Case Control Module Replacement Application instructions in this section	▪ Using Jaguar Land Rover approved diagnostic equipment, perform the Transfer Case Healthcheck Application. The application will subsequently test the system and report a DTC if a fault persists ▪ If fault persists, install a new transfer case control module and configure as a new module. Refer to the Transfer Case Control Module Replacement Application instructions in this section

transmissionmanuals.com

	▪ U1A4B-47 ▪ U1A4B-48 ▪ U1A4B-49 ▪ U1A4B-55 ▪ U1A4B-56 ▪ U1A4B-64 ▪ U1A4B-84 ▪ U200C-4B ▪ U200C-64 ▪ U2011-18 ▪ U2011-19 ▪ U2011-1D ▪ U2011-28 ▪ U2011-41 ▪ U2011-56 ▪ U2011-62 ▪ U2011-68 ▪ U2011-77 ▪ U2011-78 ▪ U2011-85 ▪ U2011-86 ▪ U2011-9A ▪ U2016-04 ▪ U2016-06 ▪ U2016-47			

transmissionmanuals.com

▪ U2016-49 ▪ U2016-92 ▪ U3000-1C ▪ U3000-42 ▪ U3000-4A ▪ U3012-04 ▪ U3012-1C ▪ U3012-48 ▪ U3012-92 ▪ U3012-94 ▪ U3012-96		
▪ U3006-13	▪ Refer to the electrical circuit diagrams and check the transfer case control module power and ground circuits for open circuit, high resistance. Repair circuit as required, clear DTC and retest ▪ Using Jaguar Land Rover approved diagnostic equipment, check for related low voltage DTCs and refer to the relevant DTC index ▪ Using Jaguar Land Rover approved diagnostic equipment, perform the Transfer Case Healthcheck Application. The application will subsequently test the system and report a DTC if a fault persists	▪ Using Jaguar Land Rover approved diagnostic equipment, perform the Transfer Case Healthcheck Application. The application will subsequently test the system and report a DTC if a fault persists ▪ If fault persists, install a new transfer case control module and configure as a new module. Refer to the Transfer Case Control Module Replacement Application instructions in this section

transmissionmanuals.com

TRANSFER CASE CLASSIFICATION AND CLASSIFICATION VERSION NUMBER LOCATION

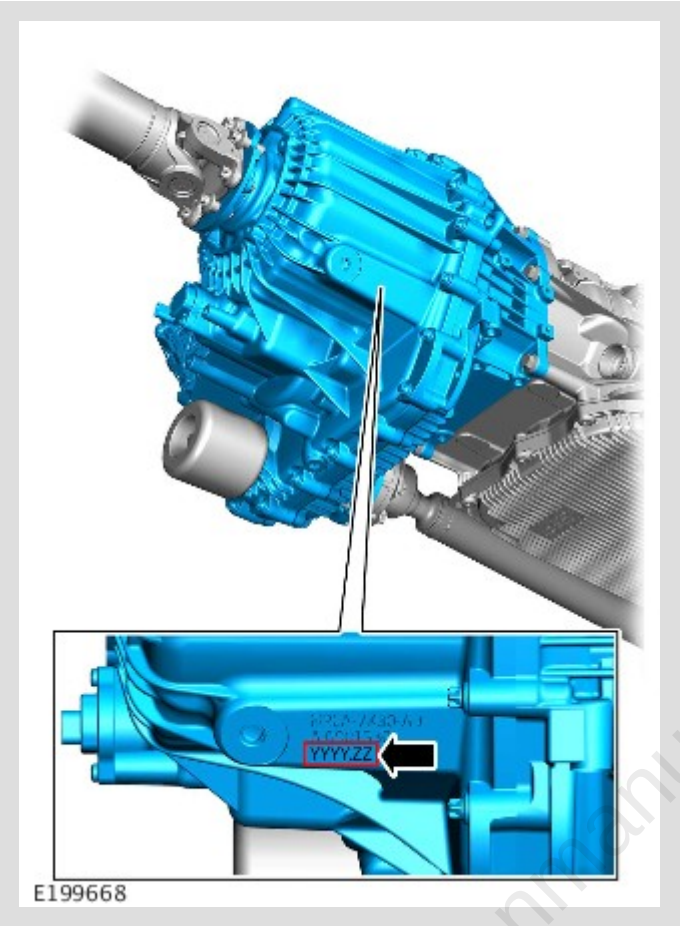

Note the six digit code stamped on the transfer case (illustrated as YYYY.ZZ). The first four digits (YYYY) represent the classification number (in decimal), the final two digits (ZZ) represent the classification version (in decimal)

TRANSFER CASE SERVICE ROUTINES

There are a range of diagnostic and service procedures available for the transfer case and its constituent components (transfer case clutch, range selection mechanism, transfer case control module). A number of these procedures are exclusively utilised by the Pathfinder Tool Guided Diagnostic Flows, while others are available as standalone applications. Details of the transfer case/transfer case control module service routines and procedures are listed below:

STANDALONE APPLICATIONS (ECU SET-UP APPLICATIONS)

The following procedures may be accessed and run individually by the service technician and should be used to facilitate replacement of the transfer case, transfer case components or transfer case oil changes:

transmissionmanuals.com

HIGH/LOW RANGE POSITION SENSOR REPLACEMENT APPLICATION (ROTARY POSITION SENSOR REPLACEMENT APP)

When a new high/low range position sensor is installed, this procedure must be performed using JLR approved diagnostic equipment to ensure the appropriate set-up and calibration procedures and to check the installation.

TRANSFER CASE REPLACEMENT APPLICATION

NOTE:

The Transfer Case will be delivered with a transfer case control module already fitted and calibrated. Thus, there is no calibration work necessary

When a new transfer case is installed, this procedure must be performed using JLR approved diagnostic equipment to ensure the appropriate set-up and calibration procedures and to check the installation.

TRANSFER CASE OIL REPLACEMENT

Use this procedure whenever the transfer case oil requires replacement. This procedure must be performed using JLR approved diagnostic equipment.

TRANSFER CASE HEALTHCHECK APPLICATION

To perform a test of transfer case clutch and range change functionality, for example, to validate a transfer case repair, this procedure must be performed using JLR approved diagnostic equipment.

STANDALONE APPLICATIONS (MODULE SET UP REQUIREMENTS)

The following procedures may be accessed and run individually by the service technician and should be used to facilitate replacement or reprogramming of the transfer case control module:

TRANSFER CASE CONTROL MODULE REPLACEMENT APPLICATION

CAUTION:

transmissionmanuals.com

Warning: Driving the vehicle before the whole process is completed might cause damage in the transfer case

When a new transfer case control module is installed, this procedure must be performed using JLR approved diagnostic equipment to ensure the appropriate set-up and calibration procedures and to check the installation.

EXISTING MODULE PROGRAMMING APPLICATION

To reconfigure the transfer case control module with the latest level software, this procedure must be performed using JLR approved diagnostic equipment.

DTC INDEX

For a list of Diagnostic Trouble Codes (DTCs) that could be logged on this vehicle, please refer to Section 100-00. REFER to: Diagnostic Trouble Code Index - DTC: Transfer Case Control Module (TCCM) (100-00 General Information, Description and Operation).

transmissionmanuals.com